BP-2315G3 / G2

5-slot PXI Express Backplane

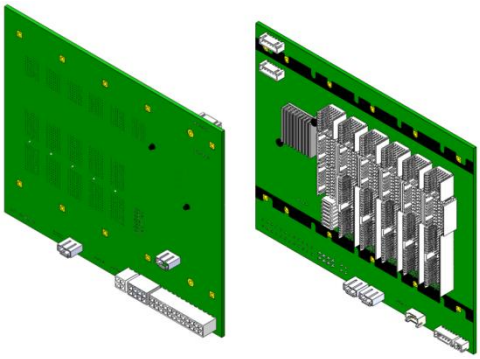

Please download JYTEK <JYPEDIA>, you can quickly inquire the product prices, the key features and available accessories..

Overview

BP-2315 is a high performance PCIe Gen3 or Gen2 5-slot all hybrid PXIe backplane. It provides high data throughput, high clock accuracy and low power noise. The standard ATX power connector for easy to provide the power to backplane.

Main Features

- High data throughput 5-slot PCIe Gen2 (BP-2315G2) or Gen3 PXIe chassis (BP-2315G3)
- High clock accuracy and low phase jitter
- Low power ripple noise
- Standard ATX power connector
- Specially designed for cost effective PXI/PXIe applications

Mechanical Dimensions

All dimensions are shown in mm (millimeters).

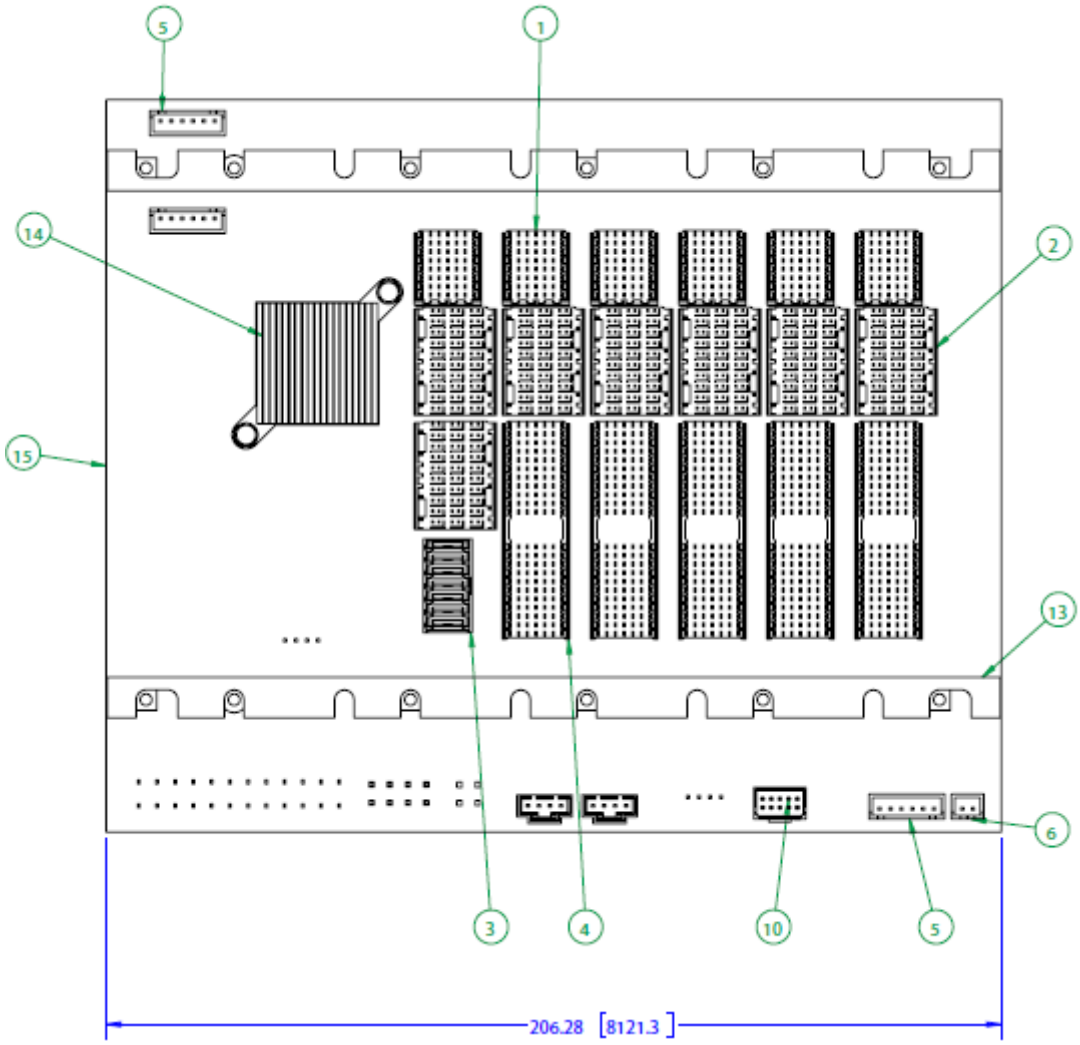

Figure 1 Top side

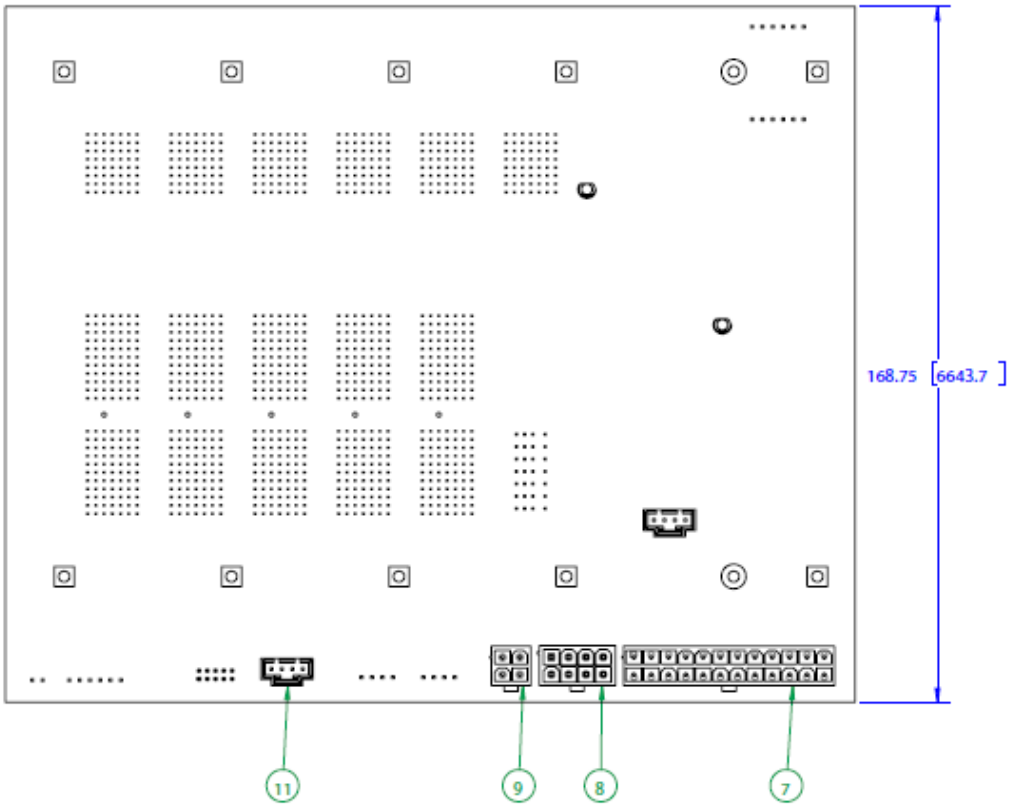

Figure 2 Bottom side

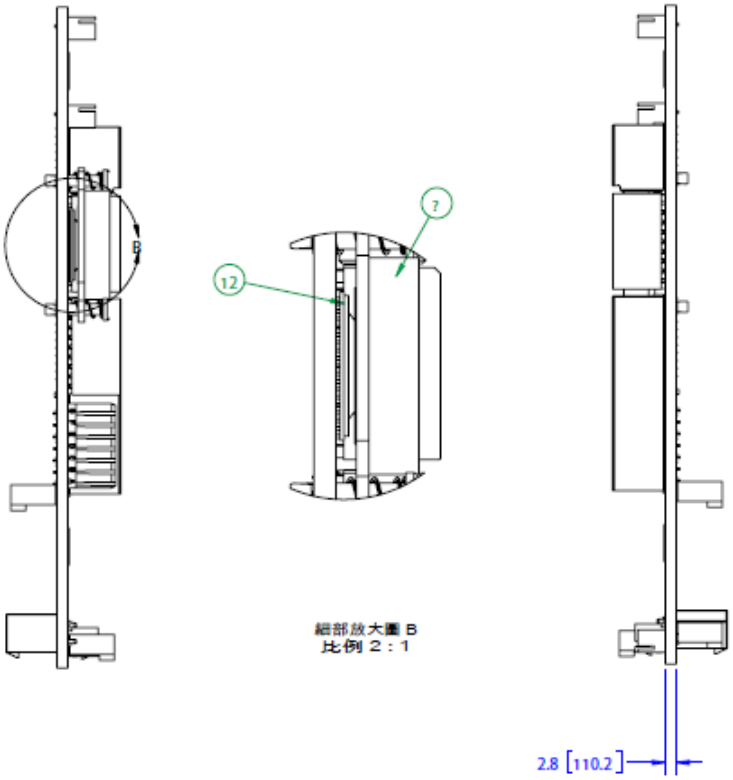

Figure 3 Cross View

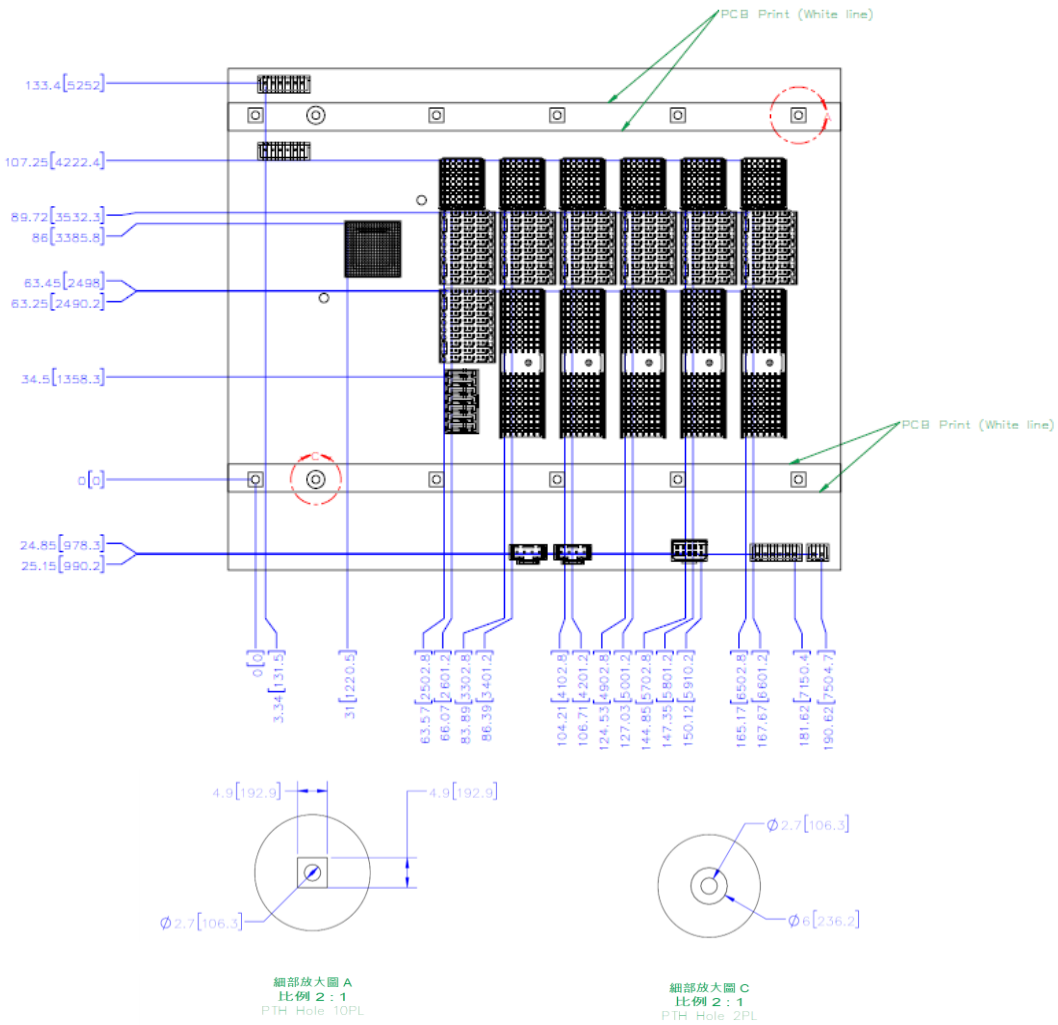

Figure 4 Connectors and Screw holes, top view

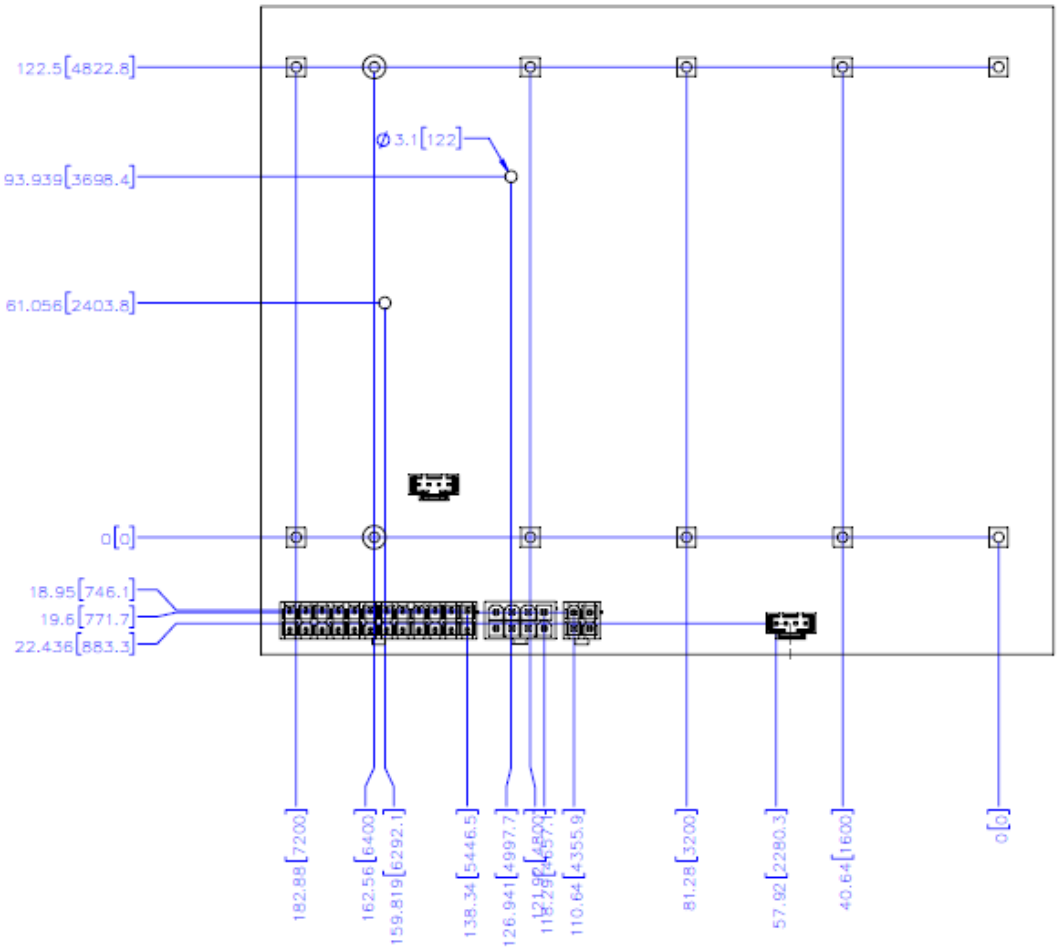

Figure 5 Connectors and Screw holes, bottom view

Specifications

Basic

Backplane Model Name	BP-2315G3	BP-2315G2
Slot Count	5	5
Maximum system bandwidth	16 GB/s (PCIe Gen3 x16)	8 GB/s (PCIe Gen2 x16)
Maximum slot bandwidth	4 GB/s (PCIe Gen3 x4)	2 GB/s (PCIe Gen2 x4)
Onboard Clock Type	VCXO	VCXO
Number of hybrid slots	4	4

PXIe-2315G3 backplane configuration Diagram

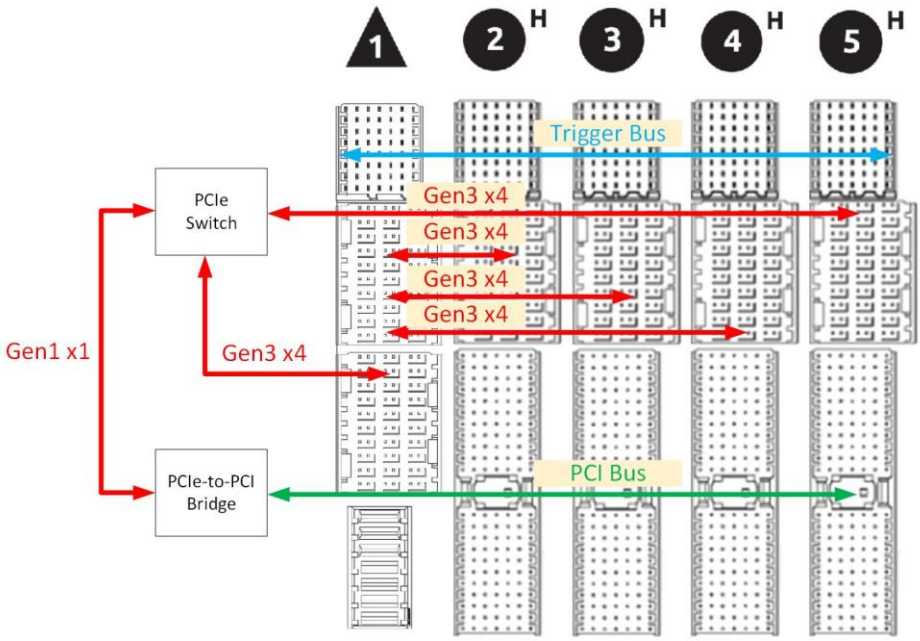

PXIe-2315G2 backplane configuration Diagram

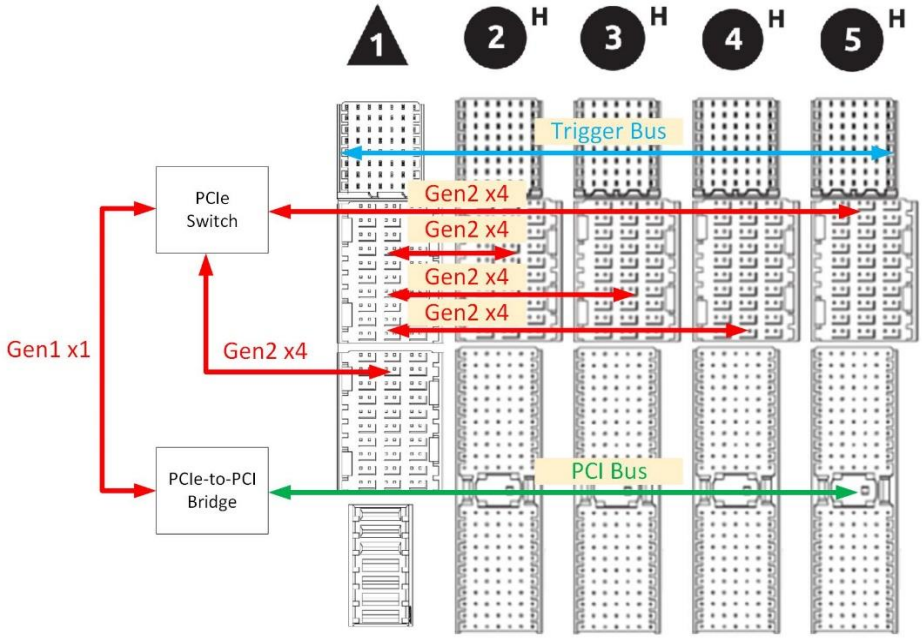

Continuous Current Capability

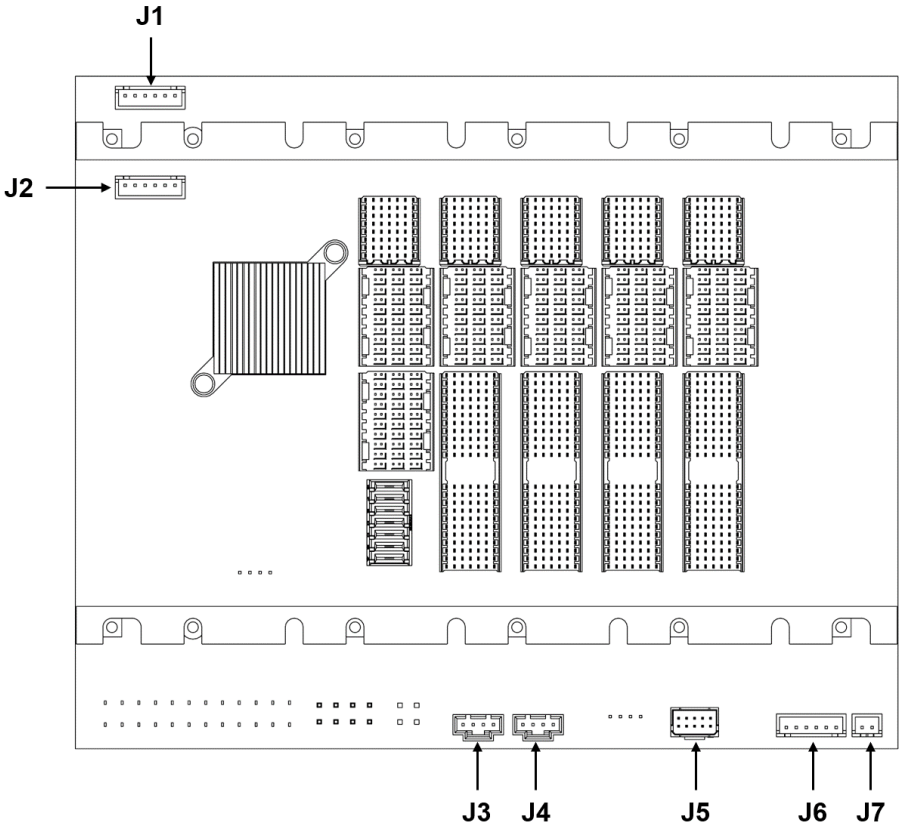

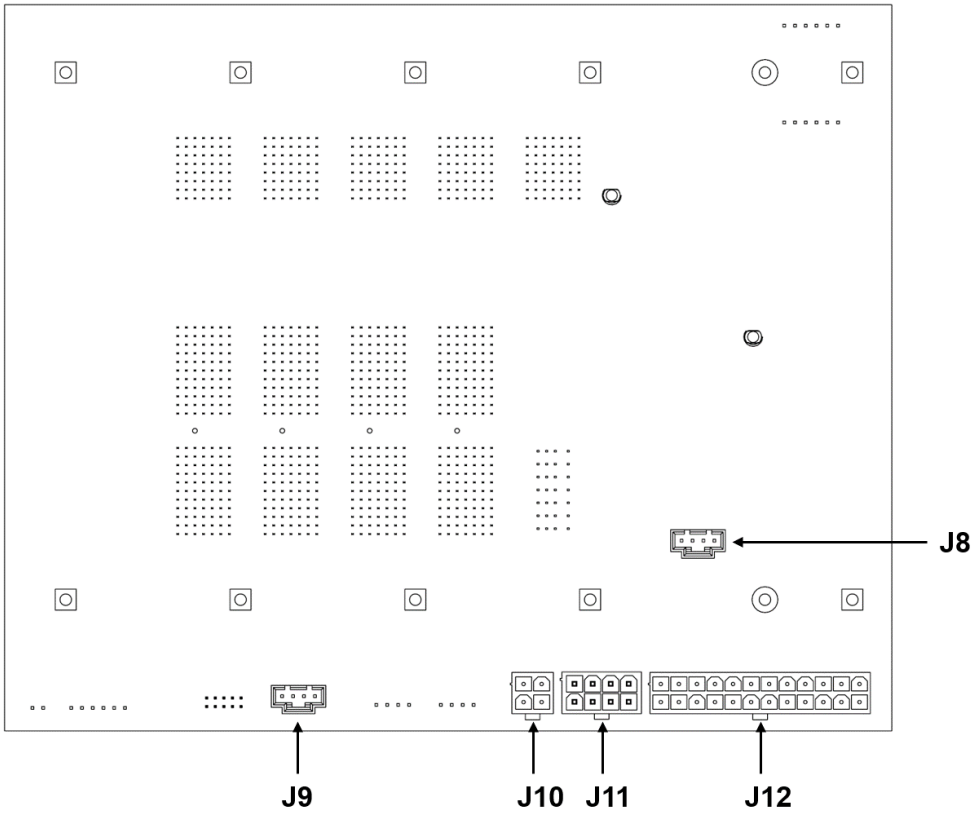

Power Connector

Connector	Continuous Current Capability
J10	8A per contact
J11	9A per contact
J12	9A per contact

Control Signal Connector

Connector	Continuous Current Capability
J1	3A per contact
J2	3A per contact
J3	3A per contact
J4	3A per contact
J5	3A per contact
J6	3A per contact
J7	3A per contact
J8	3A per contact
J9	3A per contact

System Controller Slot XJ1 Connector

+3.3 V	15 A
+5 V	15 A
+12 V	30 A
5 Vaux	1 A

Hybrid Peripheral Slot XP4 Connector

+3.3 V	9A
+12 V	6 A
5 Vaux	1 A

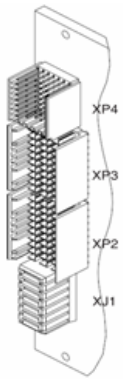

Hybrid Peripheral Slot P1 Connector

+3.3 V	6 A
+5 V	6 A
+12 V	1 A
–12 V	1 A
V (I/O)	11 A

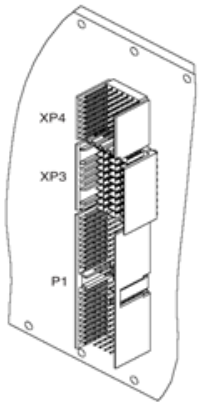

Power Requirement

DC Power Minimum Requirement
(Active components on the backplane can work normally)

+3.3V minimum required current	1.38 A
+5 V minimum required current	1.08A
+12 V minimum required current	1.21 A
–12 V minimum required current	0 A
5 Vaux minimum required current	0.81 A

System Synchronization Clock

PXI_CLK10

Maximum slot-to-slot skew	66 ps
Accuracy	±7.4 ppm max
Maximum jitter	3.7 ps RMS phase-jitter (10 Hz–1 MHz range)
Duty-factor	45%–55%
Unloaded signal swing	3.3 V ±0.3 V
Maximum slot-to-slot skew	80 ps

PXIe_CLK100

Maximum slot-to-slot skew	80 ps
Accuracy	±6.9 ppm max
Maximum jitter	3.7 ps RMS phase-jitter (10 Hz–12 kHz range) 95 fs RMS phase-jitter (12 kHz–20 MHz range)
Duty-factor	45%–55%
Absolute differential voltage	400–1000 mV

PXIe-SYNC100

Duty-factor	10%
Absolute differential voltage	400–1000 mV

Physical and Environment

Operating Environment

Ambient temperature range	0 to 70 °C
Relative humidity range	20 to 80%, noncondensing

Storage Environment

Ambient temperature range	-20 ˚C to 80 ˚C
Relative humidity range	10% to 90%

Shock and Vibration

Operational shock	30 g peak, half-sine, 11 ms pulse duration
Random Vibration (Operating)	5 to 500 Hz, 0.21 Grms, 3 axes
Random Vibration (Nonoperating)	5 to 500 Hz, 2.46 Grms, 3 axes

Backplane

Size	3U (206.28 x 168.75 x 2.8 mm)

Performance Test

PCI Bus Throughput

Slot	Test Module	Test Result
2	PXI-69846H	108 MB/s
3	PXI-69846H	108 MB/s
4	PXI-69846H	108 MB/s
5	PXI-69846H	108 MB/s
PXI-69846H is 4-ch 40MS/s 16-bit digitizer, the data bandwidth of PXI-69846H is 320Mbyte/sec.		

PCIe Bus Throughput

Slot	Fixture	Test Result
1	PXIe-63987 + PXIe RAID Card*4 + Samsung 970 EVO SSD 1TB *4	Upstream: 12.4GB/s
		Downstream:10.0GB/s
2	PXIe-63987 + PXIe RAID Card + Samsung 970 EVO SSD 1TB *2	Upstream: 3.6GB/s
		Downstream: 3.5GB/s
3	PXIe-63987 + PXIe RAID Card + Samsung 970 EVO SSD 1TB *2	Upstream: 3.6GB/s
		Downstream: 3.5GB/s
4	PXIe-63987 + PXIe RAID Card + Samsung 970 EVO SSD 1TB *2	Upstream: 3.6GB/s
		Downstream: 3.5GB/s
5	PXIe-63987 + PXIe RAID Card + Samsung 970 EVO SSD 1TB *2	Upstream: 3.6GB/s
		Downstream: 3.5GB/s

Slot1:

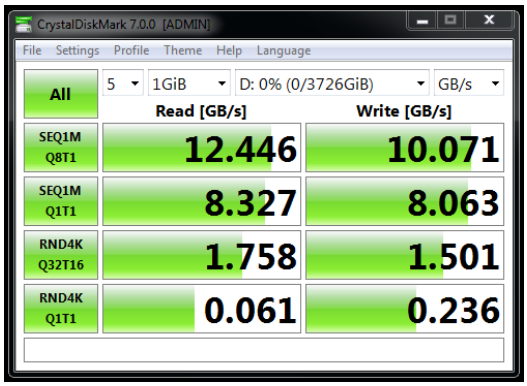

Slot2:

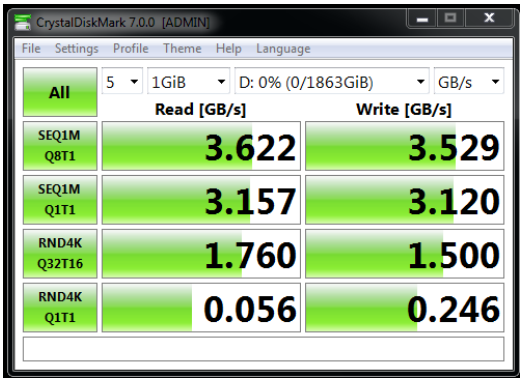

Slot3:

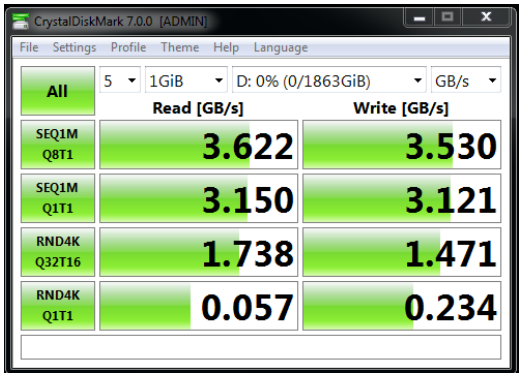

Slot4:

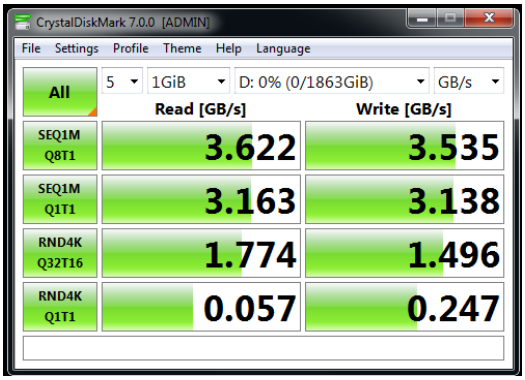

Slot5:

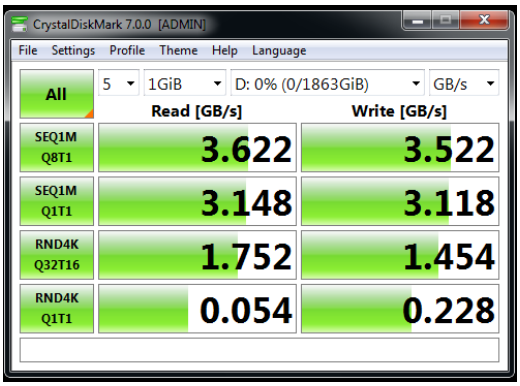
CrystalDiskMark 7.0.0 [ADMIN]
File Settings Profile Theme Help Language
All
5
1GiB
D: 0% (0/1863GiB)
GB/s
Read [GB/s]
Write [GB/s]
SEQ1M Q8T1
3.622
3.522
SEQ1M Q1T1
3.148
3.118
RND4K Q32T16
1.752
1.454
RND4K Q1T1
0.054
0.228

Order Information

- BP-2315G3 (PN:)
  3U 5-slot PXIe Gen3 backplane with all-hybrid peripheral slots.
- BP-2315G2 (PN:)
  3U 5-slot PXIe Gen2 backplane with all-hybrid peripheral slots.

Shanghai Jianyi Technology Co., Ltd.

Address: Room 201, Building 3, NO.300 Fangchun Road, Shanghai.

Post Code: 201203

Tel: 021-5047 5899

Website: www.jytek.com

All Rights Reserved. All specifications are subject to change without further notice.